Competition Sheet

Türi, 07.10.2023

8 Participants

Türi SKL auhinnaturniir

Poisid
Category

52kg
Weight class

1	**Marat Satalov**	SK Kuldkaru
2	**Artur Kosyntsev**	Viljandi SK/ MK Tulevik
3	**Kaspar Kört**	MK Lapiti
4	**Rain Tigas**	MK Lapiti
5	**Henri Pihlapuu**	Võru Spordikool
6	**Mats Artur Avi**	Järvamaa Matimehed
7	**Kirill Buldakov**	SK Kuldkaru
8	**Toms Valovs**	SK 1Piir

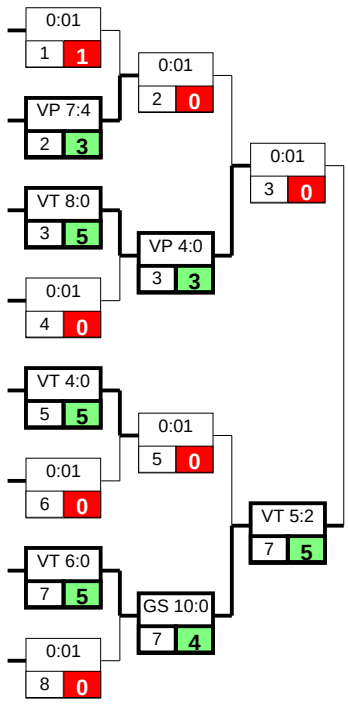

Rangliste	KP	SS	ÜK	+	-
1 Kirill Buldakov (-7)					
2 Kaspar Kört (-3)					
3 Henri Pihlapuu (-5)					
3 Rain Tigas (-4)					
5 Artur Kosyntsev (-2)					
5 Toms Valovs (-8)					
7 Marat Satalov (-1)	1	0	0	4	7
8 Mats Artur Avi (-6)	0	0	0	0	4

Repechage of loser against Kaspar Kört

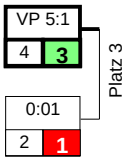

Repechage of loser against Kirill BuldakovKirill Buldakov

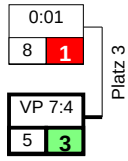

Turnierverwaltung Ringen 5.0 Licensed to Jõgeva RJK Ramm / Säärits Simmo
© 1994-2019 by NOVA Software GmbH, Issued by Klaus Armbruster, Bärenbach 16, D-77796 Mühlenbach
Tel.: +49 (0) 7832/969460, E-Mail: Klaus.Armbruster@ringersoftware.de