# Competition Sheet

Tartu, 2.06.2018

8 Participants

## 49. Georg Hackenschmidti MÄV

Kr-r poisid — Category

32kg — Weight class

| | | |
|---|---|---|
| 1 | **Mardo Ärmus** | MK Aberg |
| 2 | **Stanislav Dovzhyk** | Korrus3 |
| 3 | **Virgo Raja** | V.-Maarja |
| 4 | **Kirills Smirnovs** | Daugmale |
| 5 | **Vladislav Douzhyk** | Korrus3 |
| 6 | **Siim Argos** | V.-Maarja |
| 7 | **Glebs Dudenko** | Daugmale |
| 8 | **Bogdan Voropjanov** | MK Nelson |

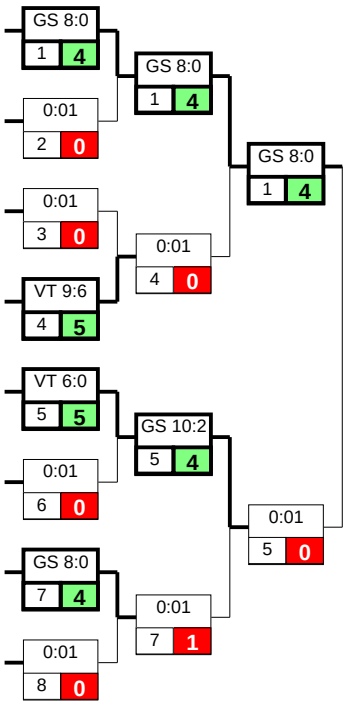


| Rangliste | KP | S | S | Ü | K | + | - |
|---|---|---|---|---|---|---|---|
| 1 Mardo Ärmus (-1) | | | | | | | |
| 2 Vladislav Douzhyk (-5) | | | | | | | |
| 3 Kirills Smirnovs (-4) | | | | | | | |
| 4 Glebs Dudenko (-7) | | | | | | | |
| 5 Siim Argos (-6) | | | | | | | |
| 5 Stanislav Dovzhyk (-2) | | | | | | | |
| 7 Virgo Raja (-3) | 0 | 0 | 0 | 6 | 9 | | |
| 8 Bogdan Voropjanov (-8) | 0 | 0 | 0 | 0 | 8 | | |

Hoffnungsrunde der Verlierer gegen Mardo Ärmus

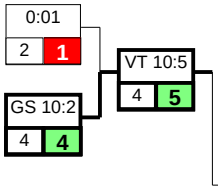


Hoffnungsrunde der Verlierer gegen Vladislav DouzhykVl

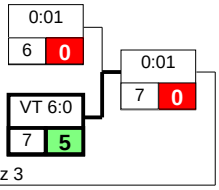


Kampf um Platz 3



© 1994-2015 by NOVA Software GmbH, Issued by Klaus Armbruster, Bärenbach 16, D-77796 Mühlenbach
Tel.: +49 (0) 7832/969460, E-Mail: Klaus.Armbruster@ringersoftware.de